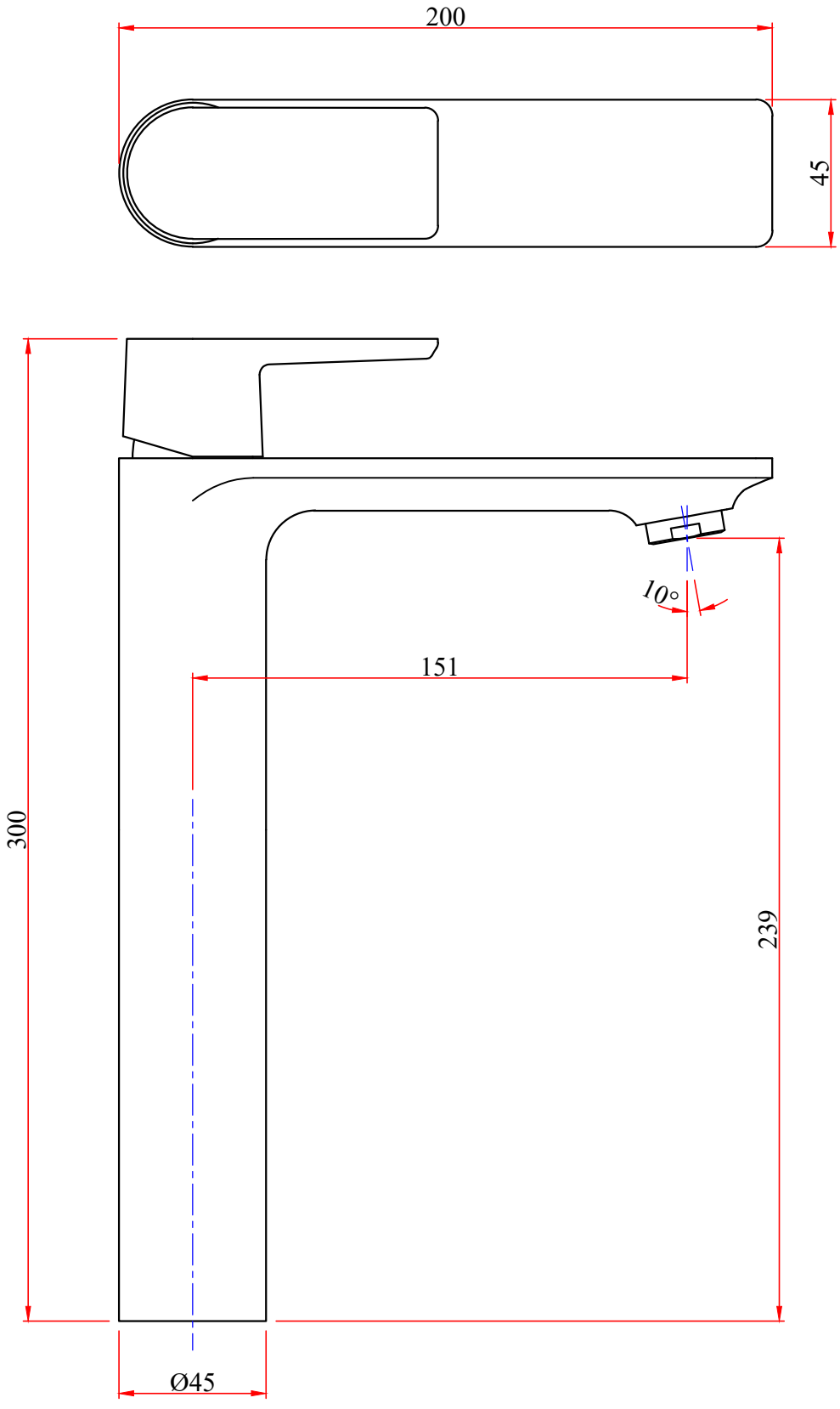

ELYSEES:-HIGH SINGLE LEVER BASIN MIXER

CODE:- ----------