ALL DIMENSION ARE IN MM

SOMANY Bathware

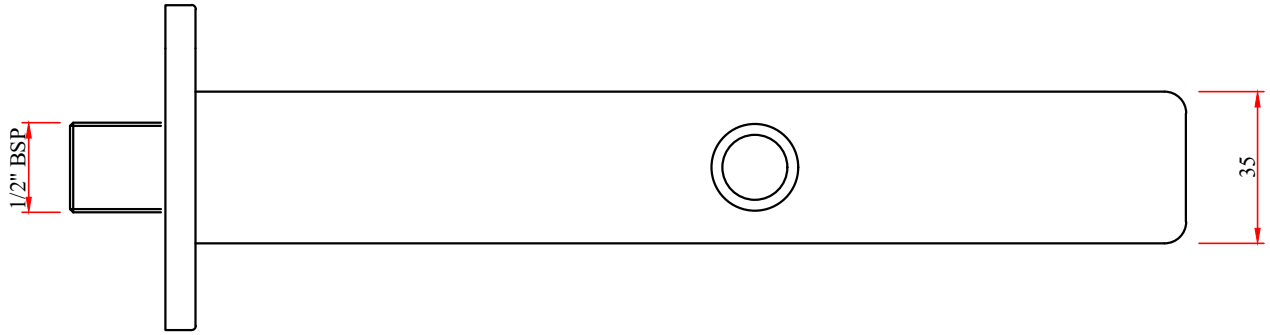

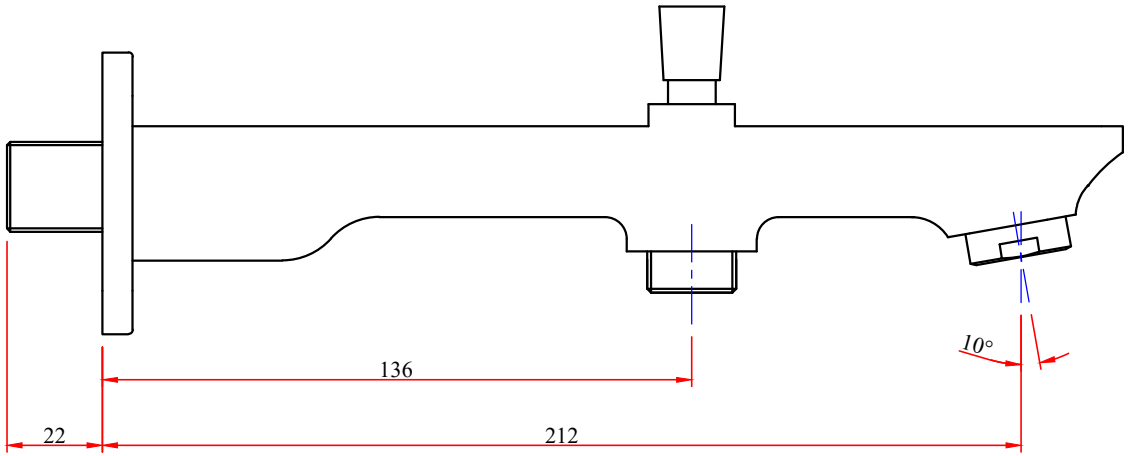

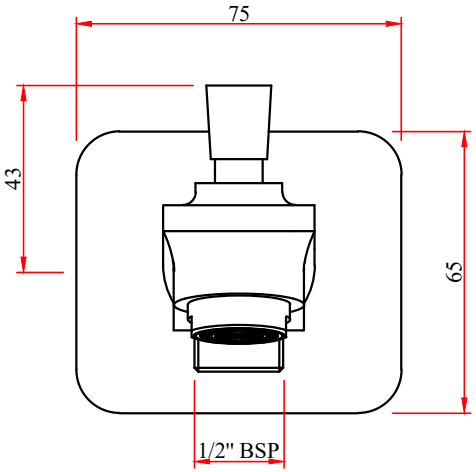

ELYSEES:- BATH TUB SPOUT WITH BUTTON

CODE:- ----------