SOMANY Bathware

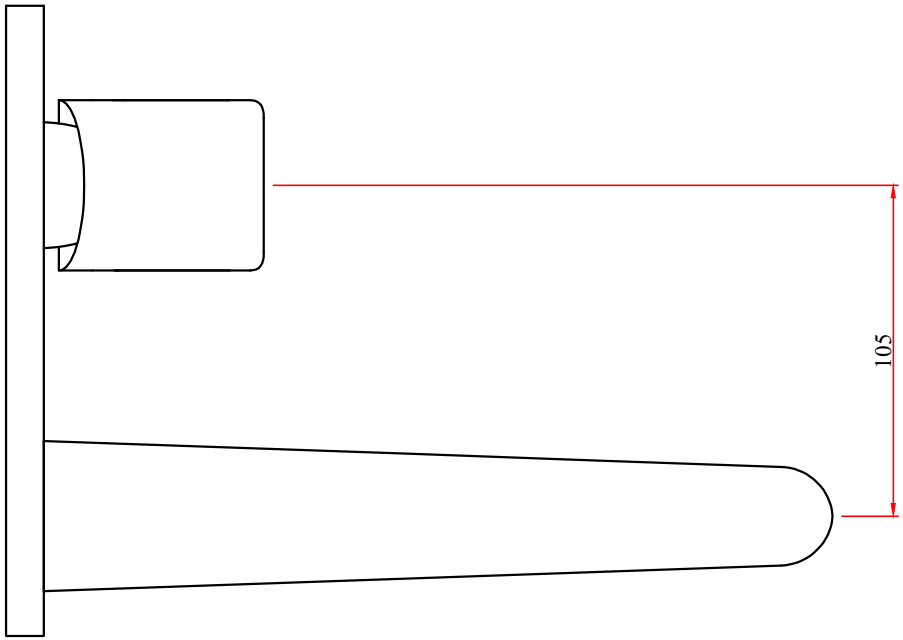

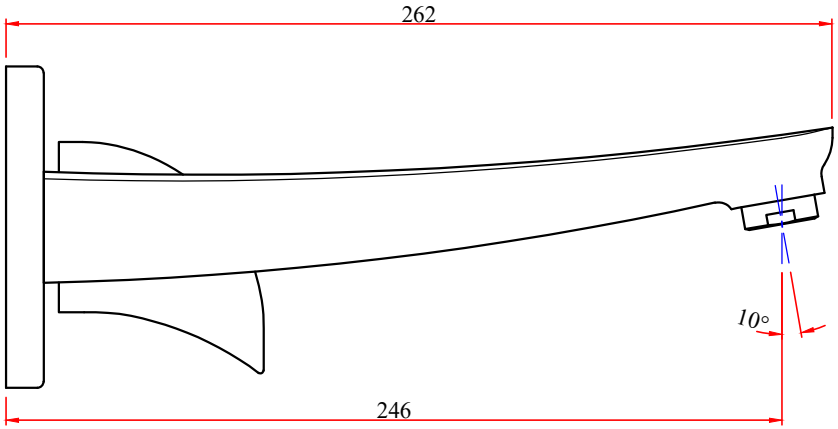

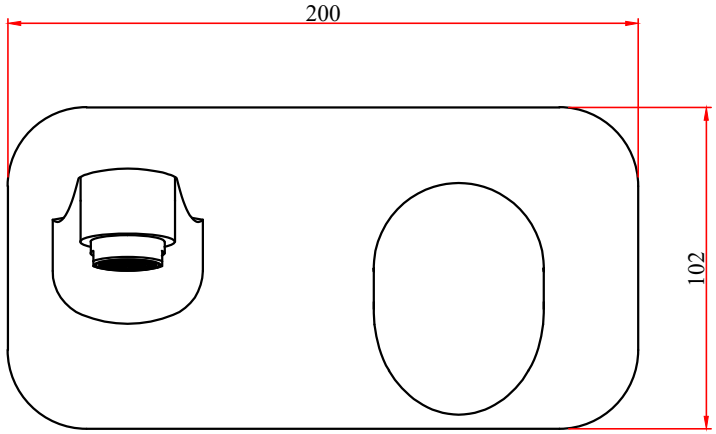

LIANA:- SINGLE LEVER BASIN MIXER WALL MOUNTED

CODE:- ----------