SOMANY Bathware

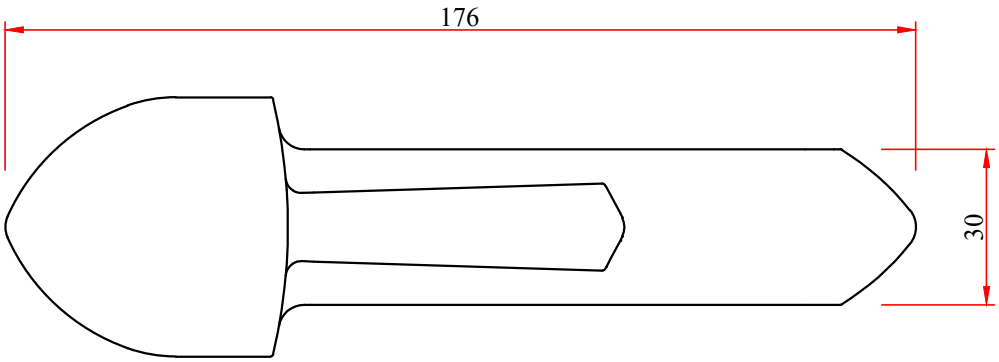

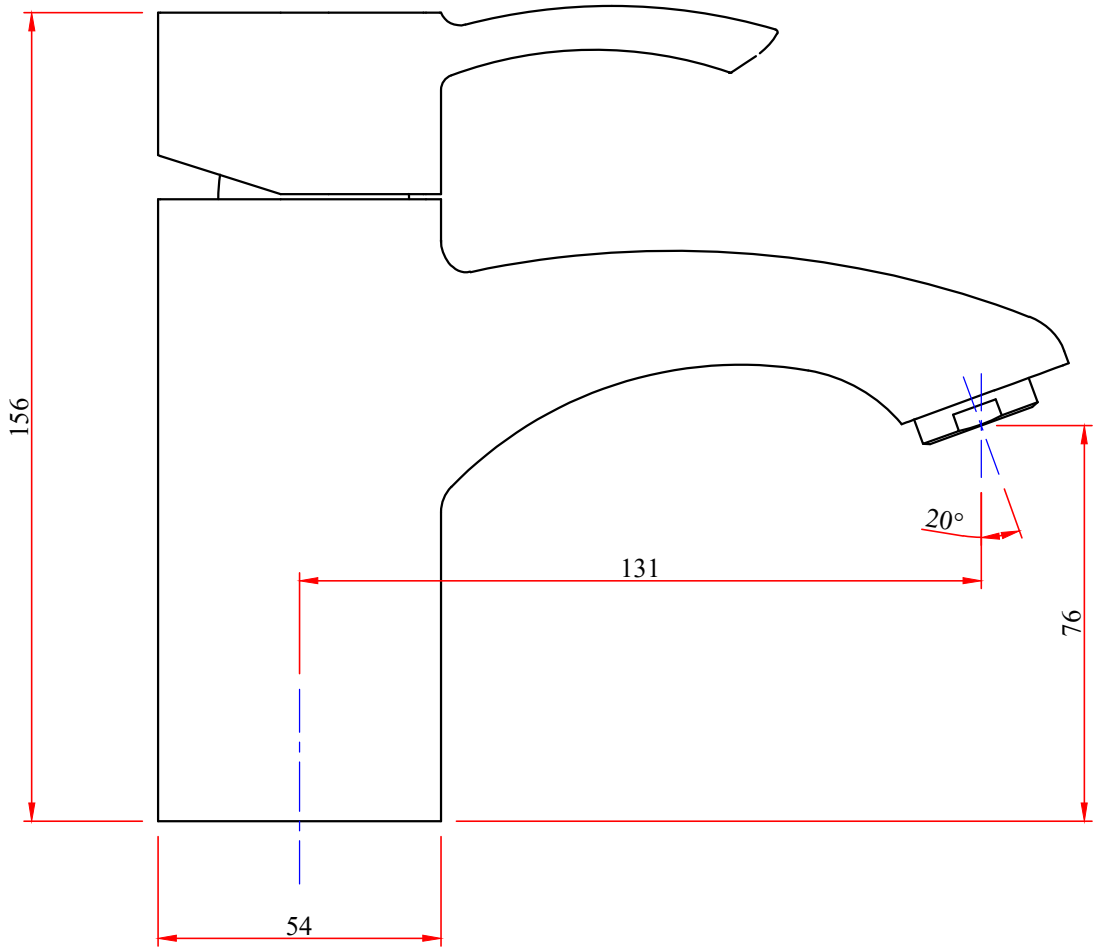

ARIZONA:- SINGLE LEVER BASIN MIXER

CODE:- ----------