SOMANY Bathware

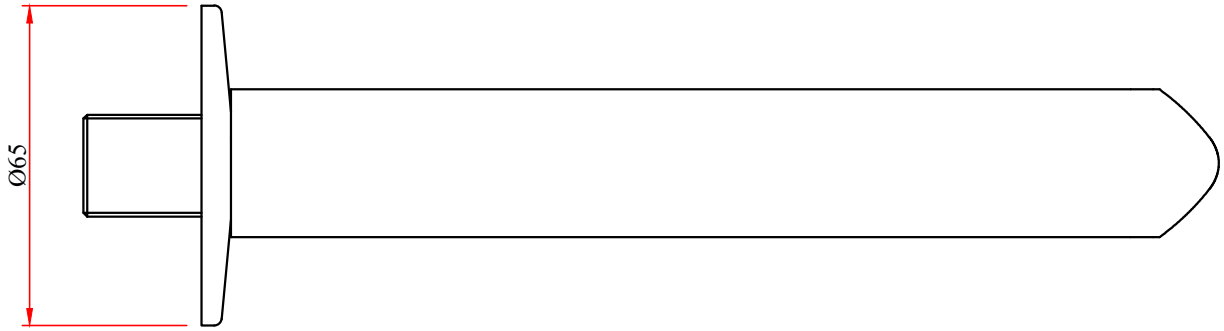

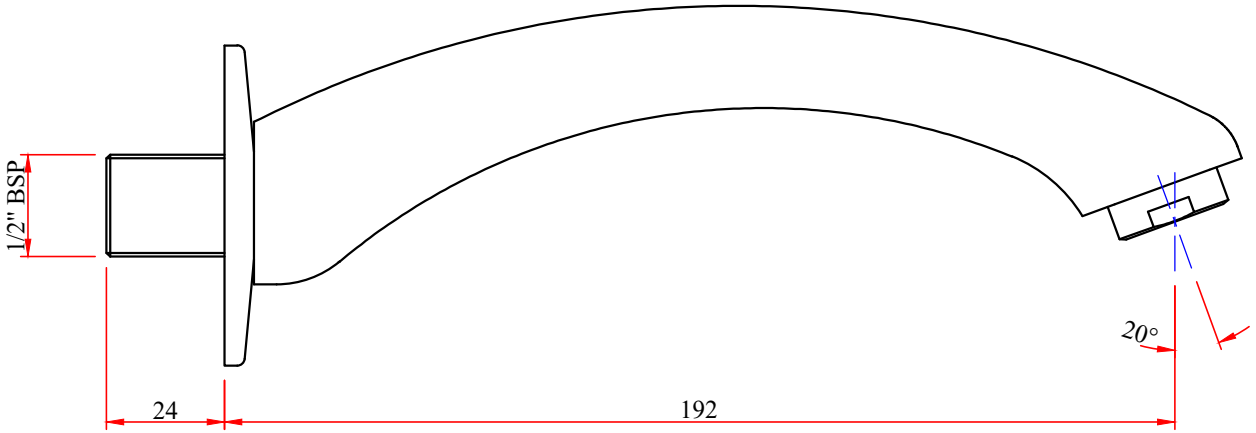

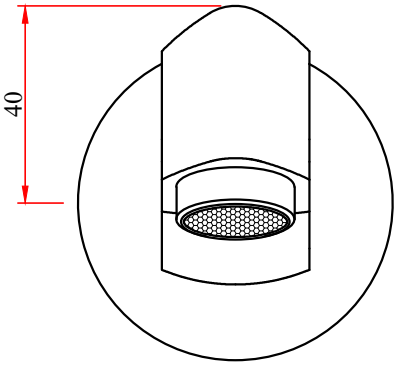

ARIZONA:- BATH TUB SPOUT

CODE:- ----------